L23: Electromagnetic compatibility

L23: 21-MAY-2019

Outlook

- Electromagnetic energy
  - Emission and propagation
  - Interference and disturbance
- Electromagnetic compatibility
  - Power electronics
  - Electric drives
- Remedies and Regulations
  - Conducted emission limits

Electromagnetic compatibility

- Electromagnetic compatibility (EMC) is the branch of electrical engineering concerned with the unintentional generation, propagation and reception of electromagnetic energy which may cause unwanted effects such as electromagnetic interference (EMI)
- EMC issues
  - Emission (generation) – reduce unwanted emission
  - Coupling – identify propagation mechanisms between transmitter and receiver
  - Susceptibility – (receiver as victim) lack of immunity to electromagnetic disturbances

Electromagnetic interference

- Electromagnetic interference (EMI) is en external disturbance that affects an electrical circuit by the coupling mechanisms
  1. Radiative
  2. Conductive
  3. Electric Capacitive
  4. Magnetic Inductive

EMC is an equipment characteristic or property
EMI is a phenomenon

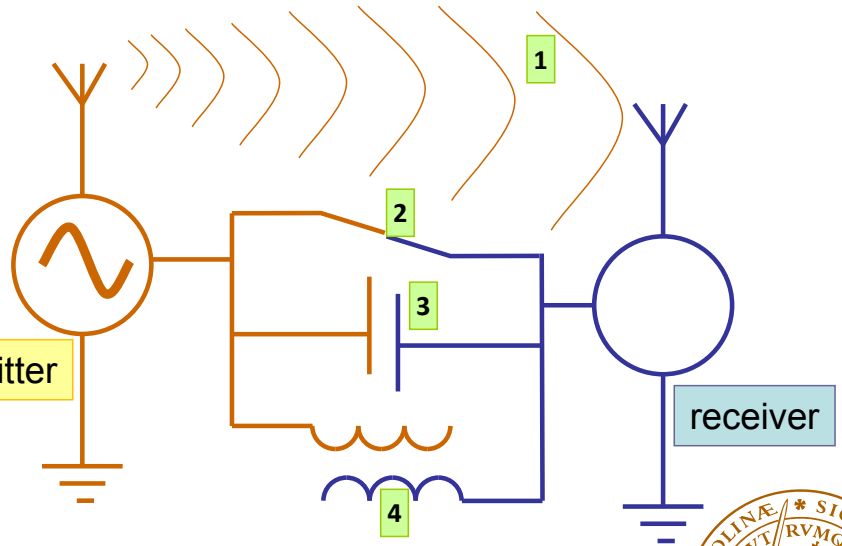

Conducted emission

Coupled less than a wavelength apart compared to wave propagation

- Electromagnetic energy propagation via a direct electric contact, capacitive and inductive paths in a power distribution network (cables, transmission line, frames, …)

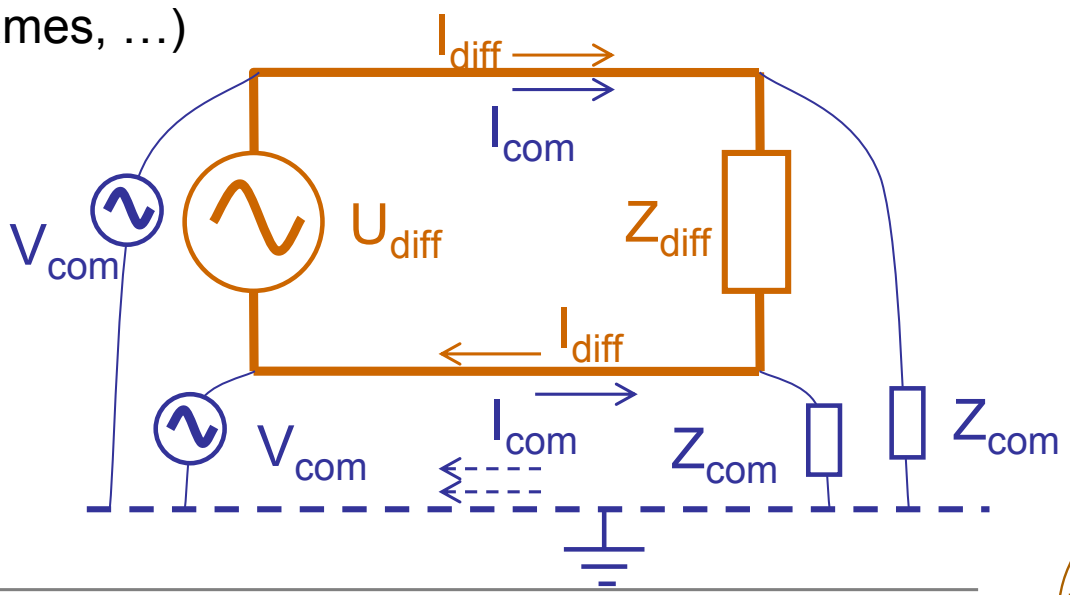

Types of interference

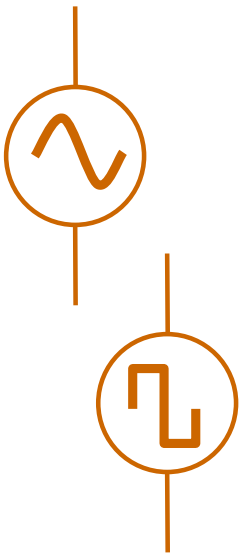

- Continuous wave from DC to daylight
  - Audio frequency from low to 20 kHz
  - Radio frequency 20kHz to 30MHz for conducted EMI
  - Broadband noise
- Pulse or transient interference
  - Switched & pulsed supplies (repetitive)
  - Power line surges & pulses
  - Electrostatic discharge, lightning
  - Geomagnetically induced currents

Switching states and output voltage

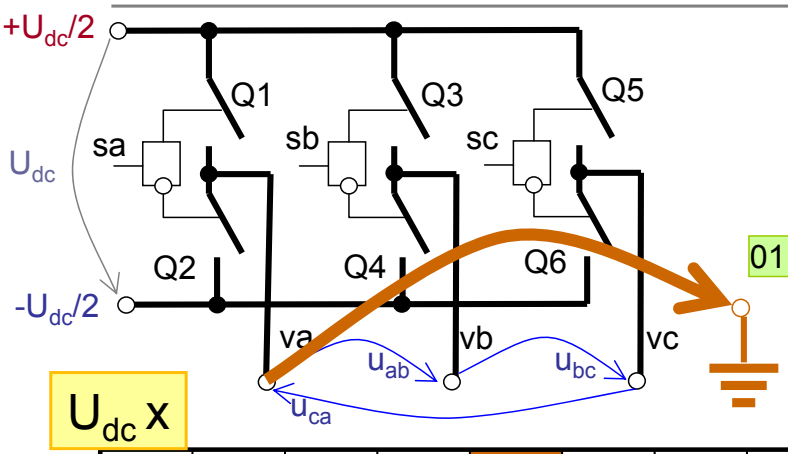

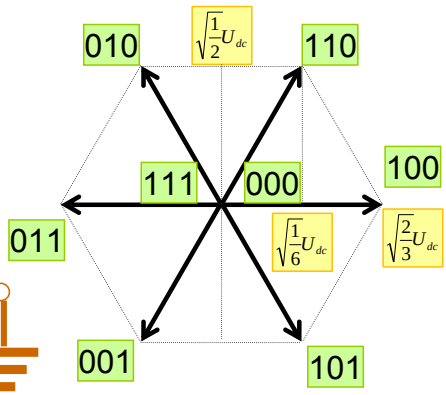

$$v_0 = \frac{v_a + v_b + v_c}{3}$$

$$u_a = v_a - v_0$$

$$u_b = v_b - v_0$$

$$u_c = v_c - v_0$$

$$u_\alpha = \sqrt{\frac{3}{2}} u_a$$

$$u_\beta = \sqrt{\frac{1}{2}} (u_b - u_c)$$

s[abc]	va	vb	vc	vo	ua	ub	uc	uab	ubc	uac	uα	uβ	ū
000	-1/2	-1/2	-1/2	-1/2	0	0	0	0	0	0	0	0	0
100	+1/2	-1/2	-1/2	-1/6	2/3	-1/3	-1/3	1	0	-1	+√2/3	0	
110	+1/2	+1/2	-1/2	+1/6	1/3	1/3	-2/3	0	1	-1	+√1/ 6	+√1/ 2	
010	-1/2	+1/2	-1/2	-1/6	-1/3	2/3	-1/3	-1	1	0	-√1/ 6	+√1/ 2	
011	-1/2	+1/2	+1/2	+1/6	-2/3	1/3	1/3	-1	0	1	-√2/3	0	
001	-1/2	-1/2	+1/2	-1/6	-1/3	-1/3	2/3	0	-1	1	-√1/ 6	-√1/ 2	
101	+1/2	-1/2	+1/2	+1/6	1/3	-2/3	1/3	1	-1	0	+√1/ 6	-√1/ 2	
111	+1/2	+1/2	+1/2	+1/2	0	0	0	0	0	0	0	0	0

Differential and common mode

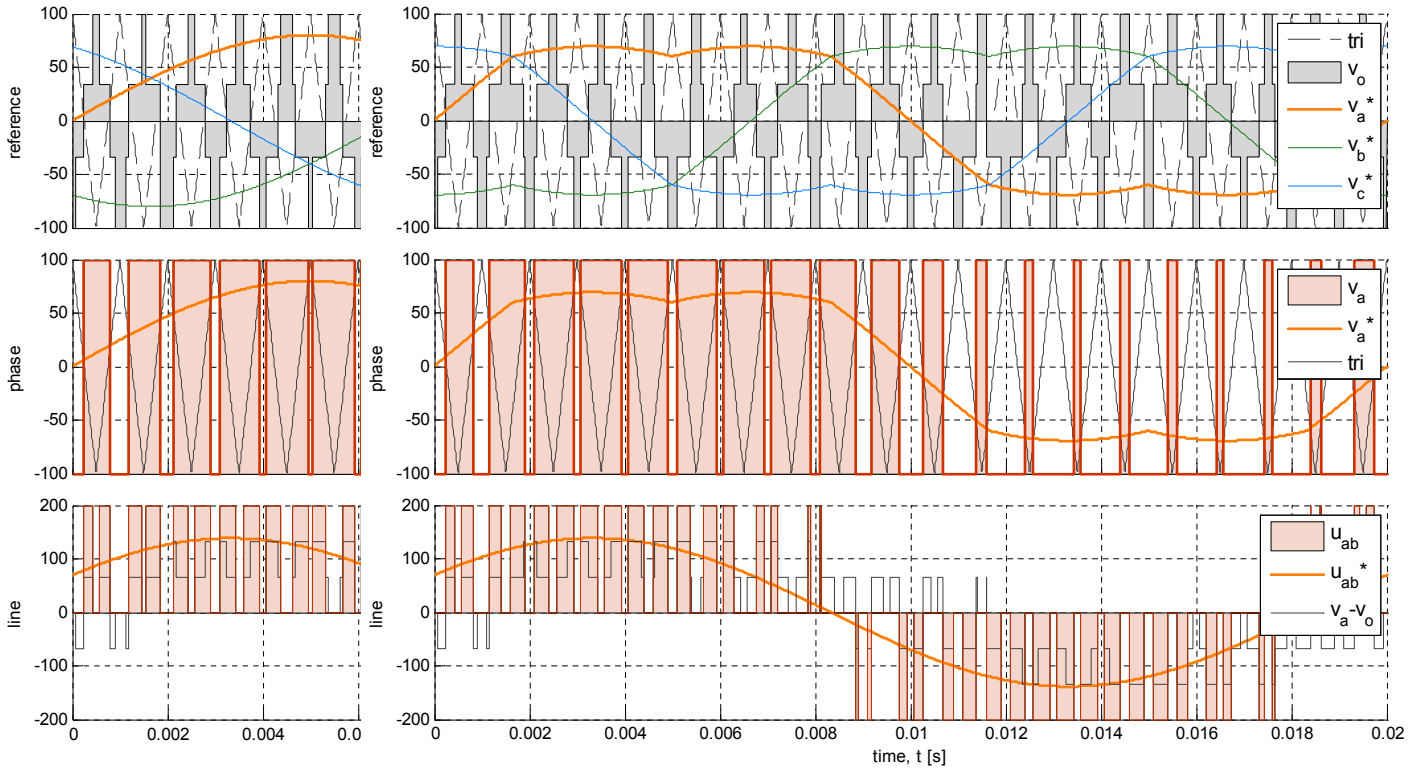

Modulation spectra

- Modulation spectrum from low to high speed and back
  - Fundamental carries out power amplification control action
  - Common mode voltage excites capacitive insulation currents
  - High frequency noise

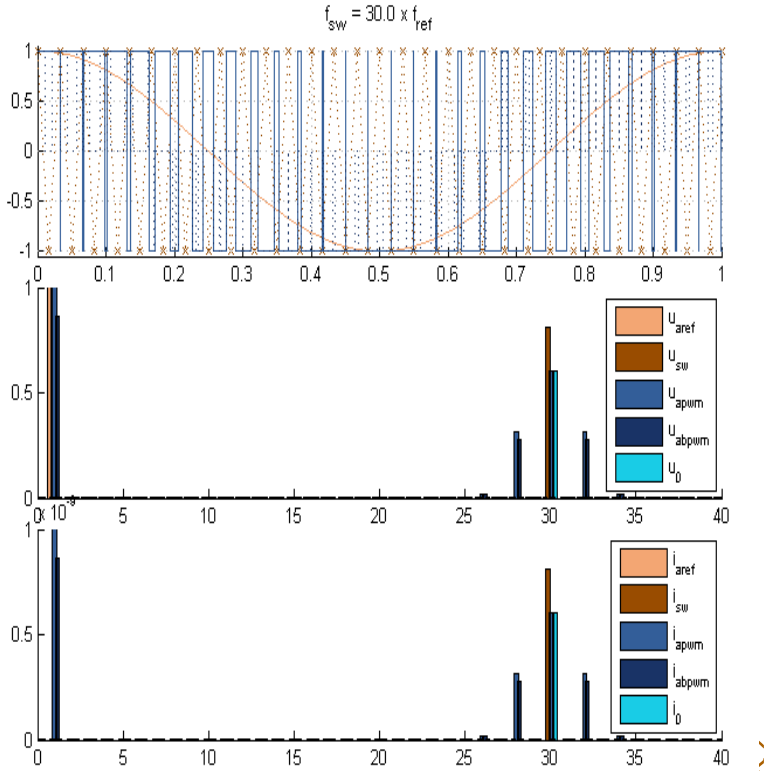

Fast switching inverters

- dV/dt – short voltage rise time from –Udc/2 to +Udc/2
- Wave propagation time can be in the same order of magnitude as voltage switch on

$$t_p = \frac{l_{cable}}{v_{cable}} = l_{cable}\sqrt{L'_{cable}C'_{cable}}$$

  - Wave reflection due to impedance mismatch as $\mu_{machine} > \mu_{cable}$
  - Critical cable length that causes full voltage wave reflection
  - Voltage overshoot at motor winding terminal – voltage can be doubled
  - Nonlinear voltage distribution causes E-field stress and discharge

Trapezoidal waveform spectrum

- Time domain

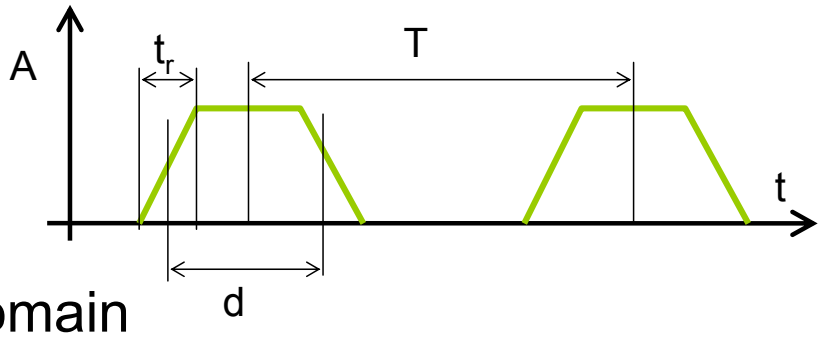

- Frequency domain

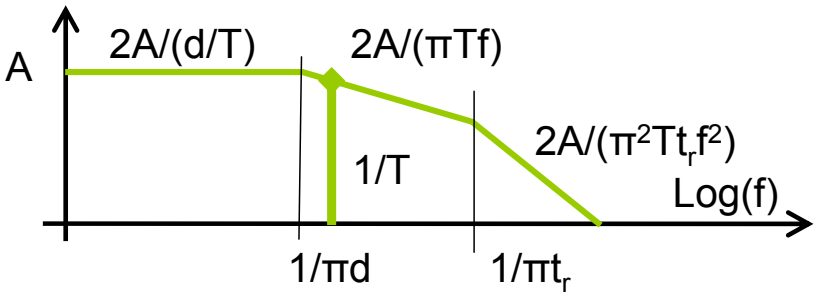

Electric drive system

- HF effects in inverter-fed machines
  - PWM→HF emission, high dV/dt+U_{com} vs reflection & overshoot
- Grounding current, shaft voltage, bearing currents
  - Unbalanced magnetic field, axial rotor flux, electrostatic effect, …
  - HF bearing currents: non circulating discharge and circulating

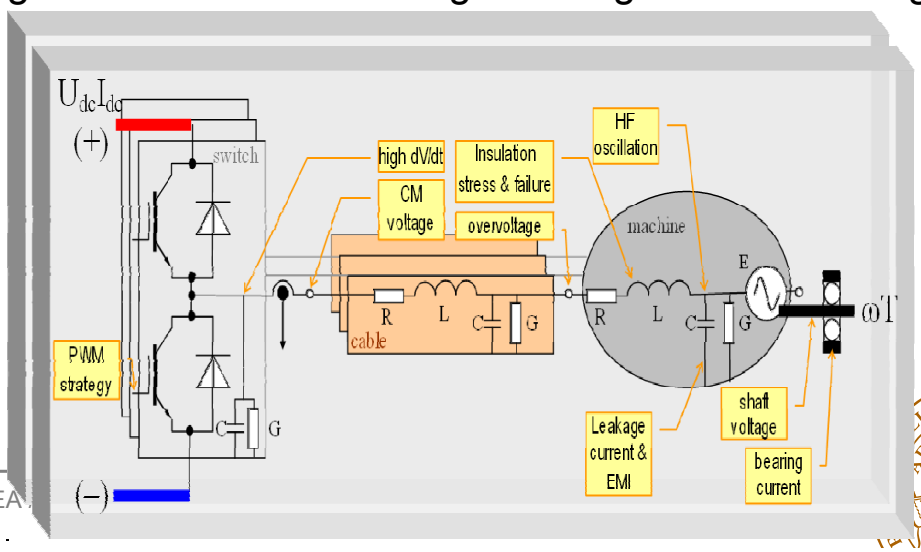

Insulation system response

- Electrical machine as a load
  - RC for electric insulation system (EIS) & RL for windings
  - Ringing at voltage switching
  - Voltage distribution determined by distributed capacitances – local inception E field and discharges
- Leakage current measurement
  - Ground, differential across winding, zero sequence, ..
  -

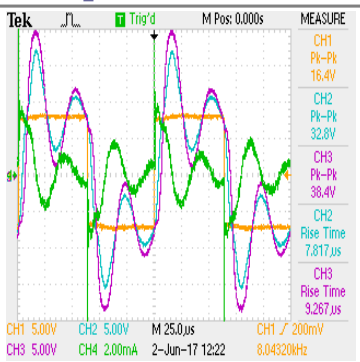

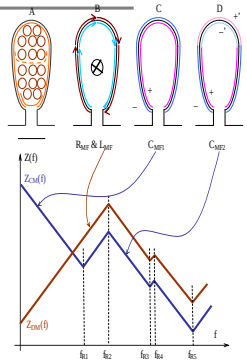

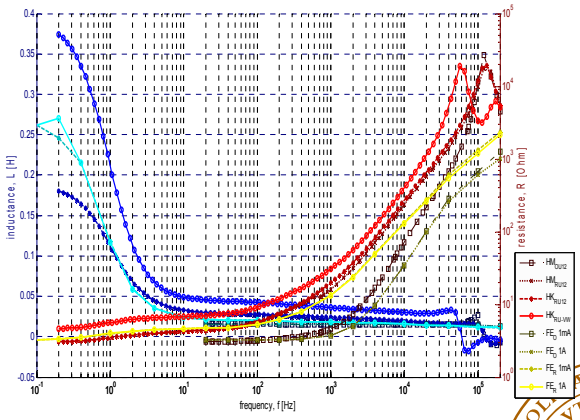

Insulation fatigue and failure

- Variable speed drive insulation system safety requirements – electric field distribution over the imperfect insulation system at possible thermal load conditions

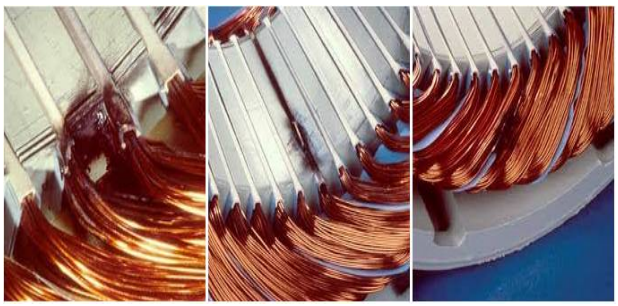

- Electrical stresses vs durability & dielectric insulation capability testing
  - polarization index, high potential, C, tan δ, surge characterization and partial discharge recognition

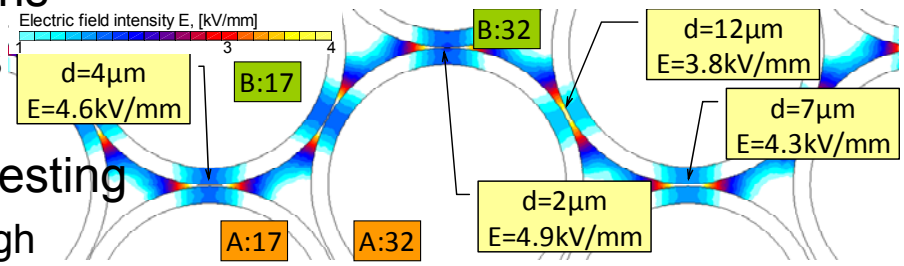

Interference mitigation

- Electromagnetic compatibility by looking at
  - (quiet) sources of disturbances
  - (inhibit) coupling paths
  - (harden) potential victims (stresses, fatigue, failure)
- Mitigation techniques
  - Grounding and shielding – providing low impedance path for EMI
  - Decoupling by introducing RF filters
  - Transmission line techniques – differential signal and return path balancing, impedance matching

Procedure to achieve EMC

- Customer specification and applicable standards
  - Emissions
  - Immunity
- Calculation of generation of harmonic currents, filter design and selection of modulation strategy
- Design rules to improve immunity and to minimize EMI and magnetic fields
- Immunity and emission testing on apparatus or system level in laboratory/test room
- Final validation of EMI, magnetic fields and harmonic currents by measurements on site

Example

Article

The Effect of Distributed Parameters on Conducted EMI from DC-Fed Motor Drive Systems in Electric Vehicles

Li Zhai [1,2,*], Liwen Lin [1,2], Xinyu Zhang [3] and Chao Song [1,2]

1 National Engineering Laboratory for Electric Vehicle, Beijing Institute of Technology, Beijing 100081, China;

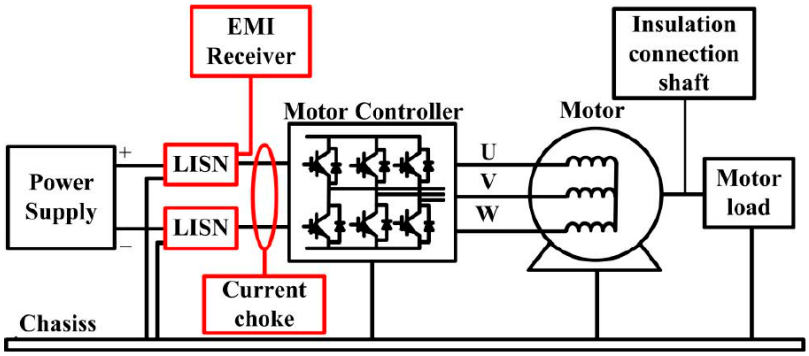

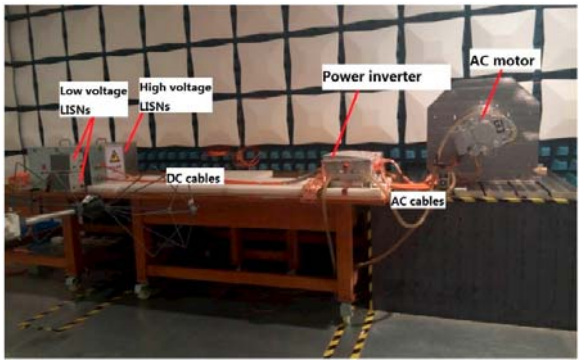

- LISN – line impedance stabilization network – LPF of known impedance and measurement point

Measurements, parameter identification

- Frequency response analysis, frequencies and excitation modes of interest, circuit and parameter identification, sensitivity analysis, …

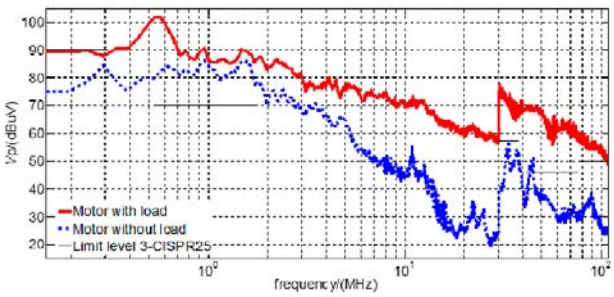

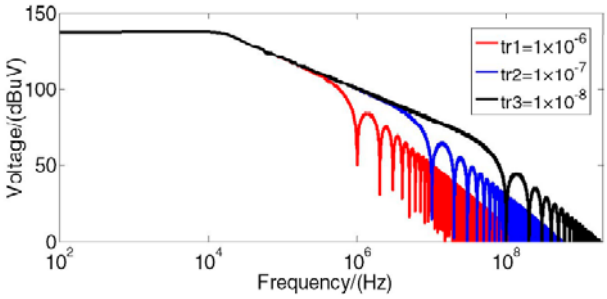

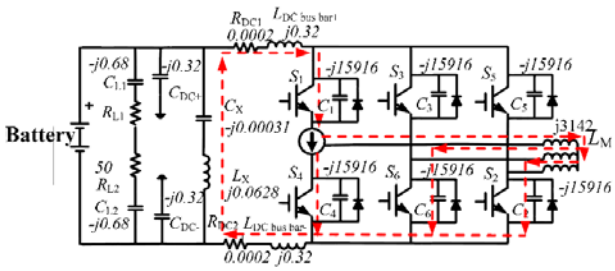

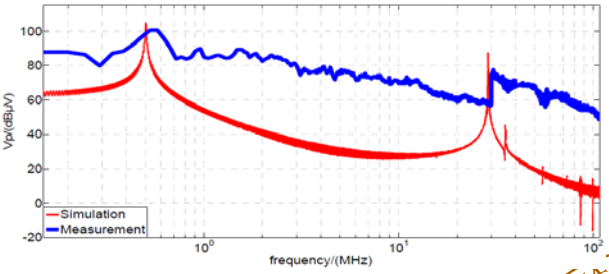

DM @ 0.5MHz